SURFACE MOUNT CRYSTAL FCX-05

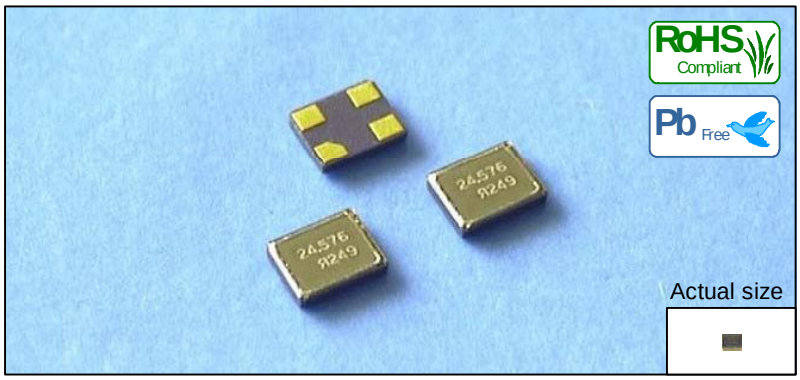

Features

- Compact design (2.5mm×2.0mm×0.6mm Max., Weight : 10mg).
- Ceramic package and metal lid assures extreme accuracy and high reliability by electron beam sealing.
- Accommodating hight precision frequency and temperature characteristics.
- Lead-free soldering is available.
- Applications : Laptop PC, DSC, DVC, Mobile phone, W-LAN, Bluetooth, Tuner module

Dimensions

Unit : mm

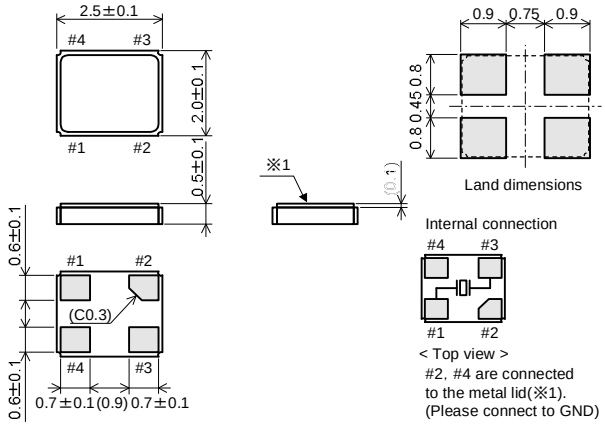

Taping

Unit : mm

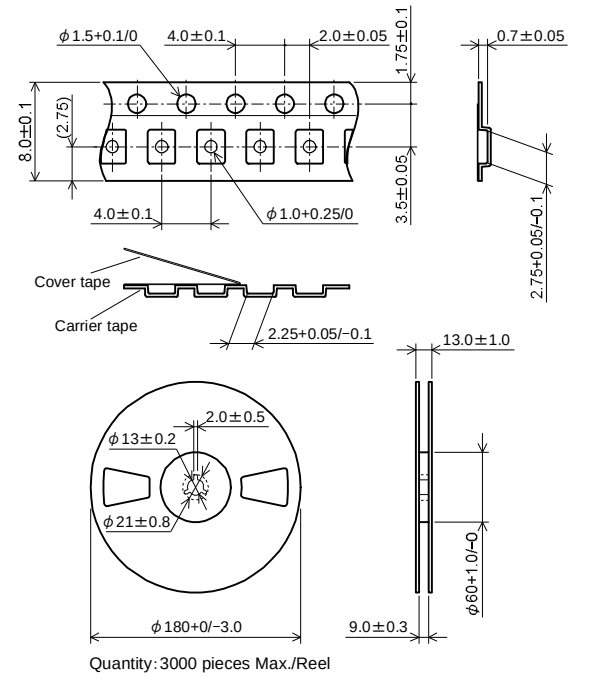

Quantity : 3000 pieces Max./Reel

Specifications

Item	Standard specifications			
Frequency range(MHz)	12.0 to 80.0			
Overtone order	Fundamental			
Frequency tolerance (ppm)(at 25°C)	±10, ±20, ±30, ±50, ±100			
Storage temperature range(°C)	−40 to +85			
Operating temperature range(°C)	0 to +50	−10 to +60	−20 to +70	−40 to +85
Frequency versus temperature characteristics(ppm) (Refer to 25°C)	±10 ±30 ±50 ±100	±15 ±30 ±50 ±100	±20 ±30 ±50 ±100	±30 ±50 ±100
Motional resistance (ESR)	As per below table			
Level of drive(μW)	200 Max.			
Load capacitance(pF)	5.0, 6.0, 7.0			

Frequency(MHz)	Motional resistance(ESR)(Ω)
12.0 to 16.0	200 Max.
16.0 to 20.0	150 Max.
20.0 to 30.0	100 Max.
30.0 to 80.0	60 Max.

- Please consult us for customized specifications.
- All specifications and markings subjected to change without notice.

RIVER ELETEC CORPORATION
URL http://www.river-ele.co.jp

Head Office	2-1-1 Fujimigaoka Nirasaki Yamanashi Japan Phone 81-551-22-1211 Fax 81-551-22-6645	River Electronics(Singapore)Pte.Ltd	Phone 65-6258-7874	Fax 65-6258-7366
		Taiwan River Co.,Ltd.	Phone 886-2-8988-2811	Fax 886-2-2983-4785
Tokyo Office	4-40-14 Nishishinjuku Shinjuku-ku Tokyo Japan Phone 81-3-3377-5444 Fax 81-3-3374-2865	Xi'an River Electronics Corporation	Phone 86-29-88697274	Fax 86-29-88635134
Osaka Office	Phone 81-6-6998-4888 Fax 81-6-6998-4899			